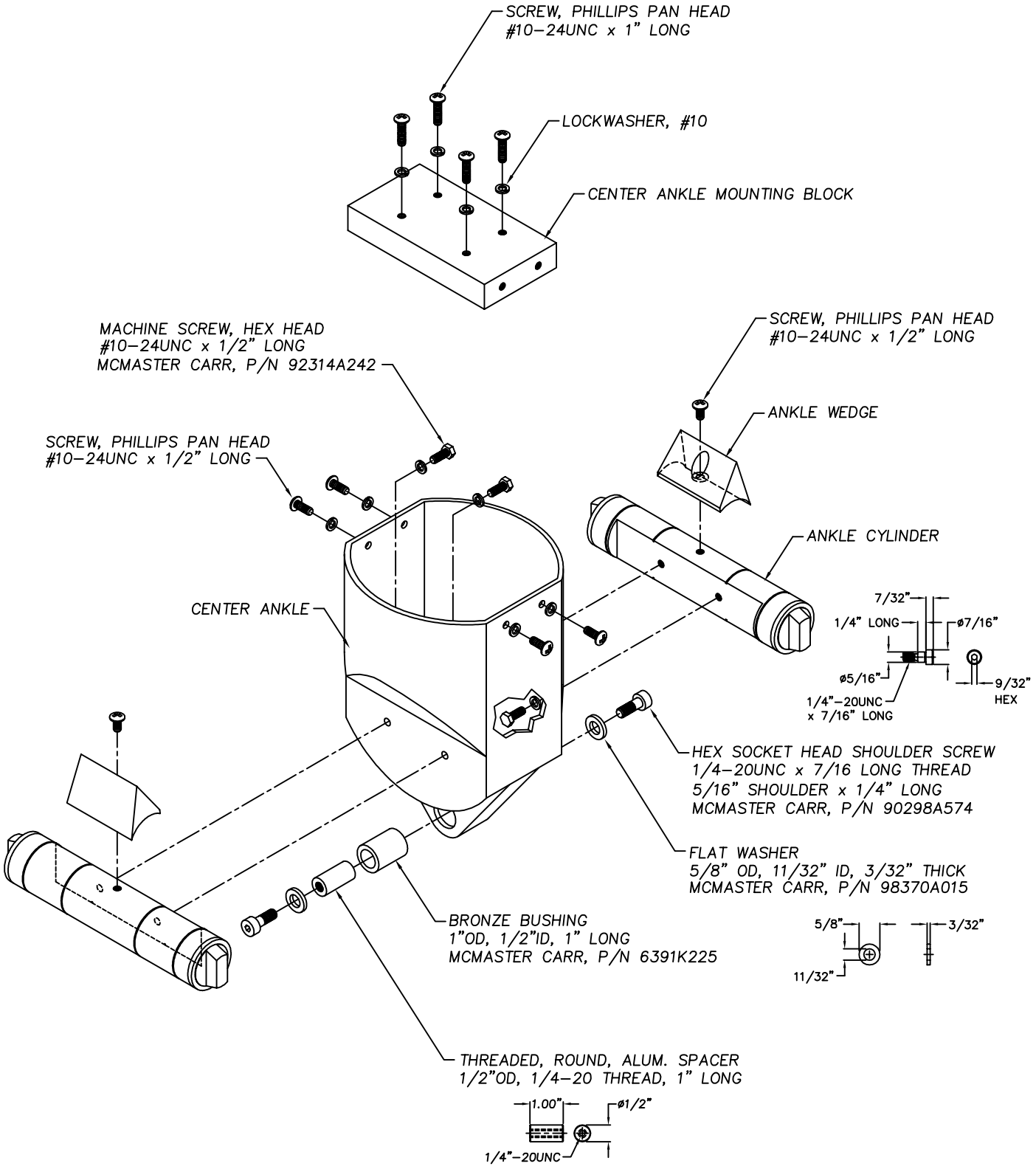
SCREW, PHILLIPS PAN HEAD
#10–24UNC x 1" LONG
LOCKWASHER, #10
CENTER ANKLE MOUNTING BLOCK
MACHINE SCREW, HEX HEAD
#10–24UNC x 1/2" LONG
MCMASTER CARR, P/N 92314A242
SCREW, PHILLIPS PAN HEAD
#10–24UNC x 1/2" LONG
SCREW, PHILLIPS PAN HEAD
#10–24UNC x 1/2" LONG
ANKLE WEDGE
ANKLE CYLINDER
CENTER ANKLE
7/32"
1/4" LONG
ø7/16"
ø5/16"
9/32"
HEX
1/4"–20UNC
x 7/16" LONG
HEX SOCKET HEAD SHOULDER SCREW
1/4–20UNC x 7/16 LONG THREAD
5/16" SHOULDER x 1/4" LONG
MCMASTER CARR, P/N 90298A574
FLAT WASHER
5/8" OD, 11/32" ID, 3/32" THICK
MCMASTER CARR, P/N 98370A015
BRONZE BUSHING
1"OD, 1/2"ID, 1" LONG
MCMASTER CARR, P/N 6391K225
5/8"
3/32"
11/32"
THREADED, ROUND, ALUM. SPACER
1/2"OD, 1/4–20 THREAD, 1" LONG
1.00"
ø1/2"
1/4"–20UNC